JOIN THE DOTS & COLOR

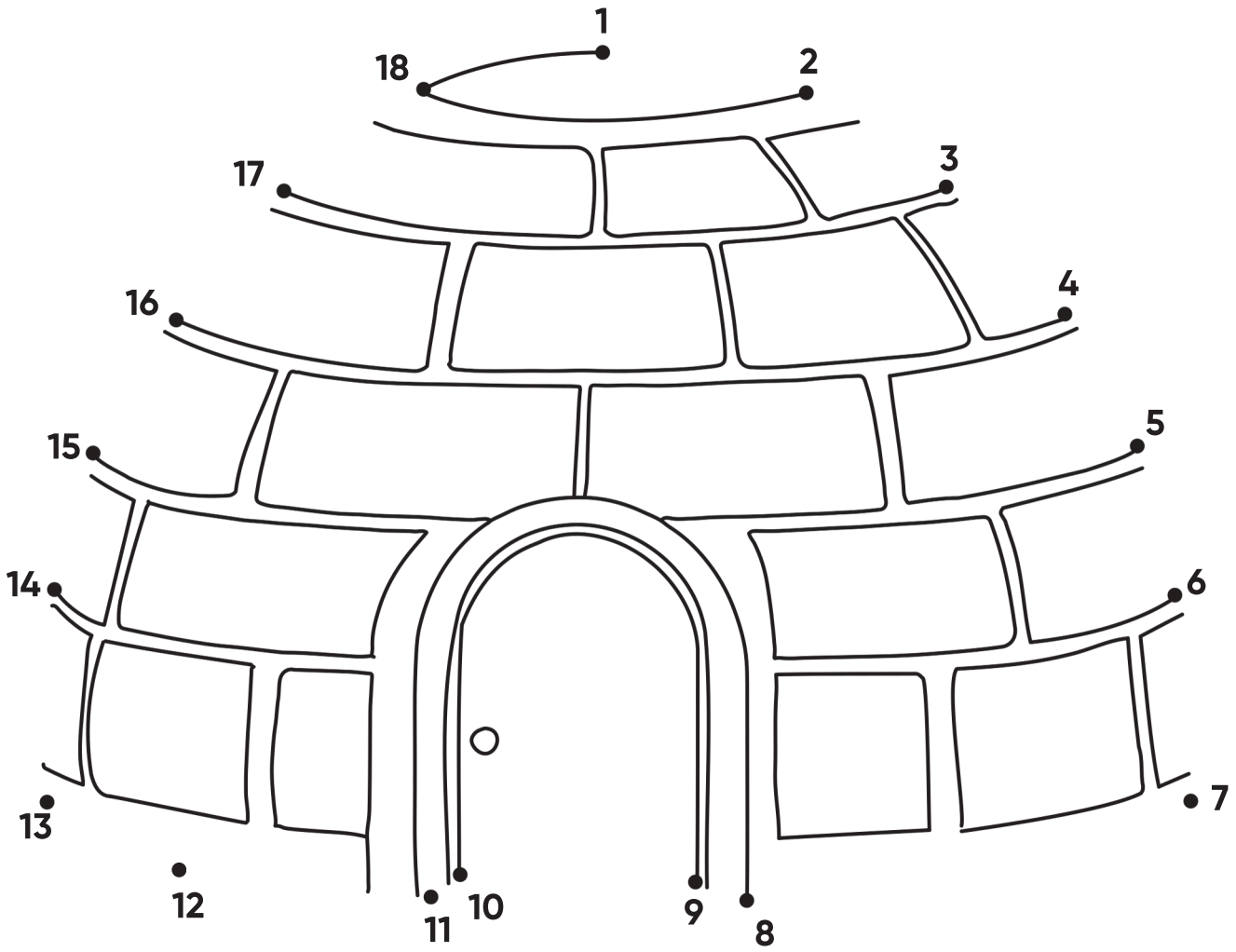

KidSpark
LEARNING IS FUN